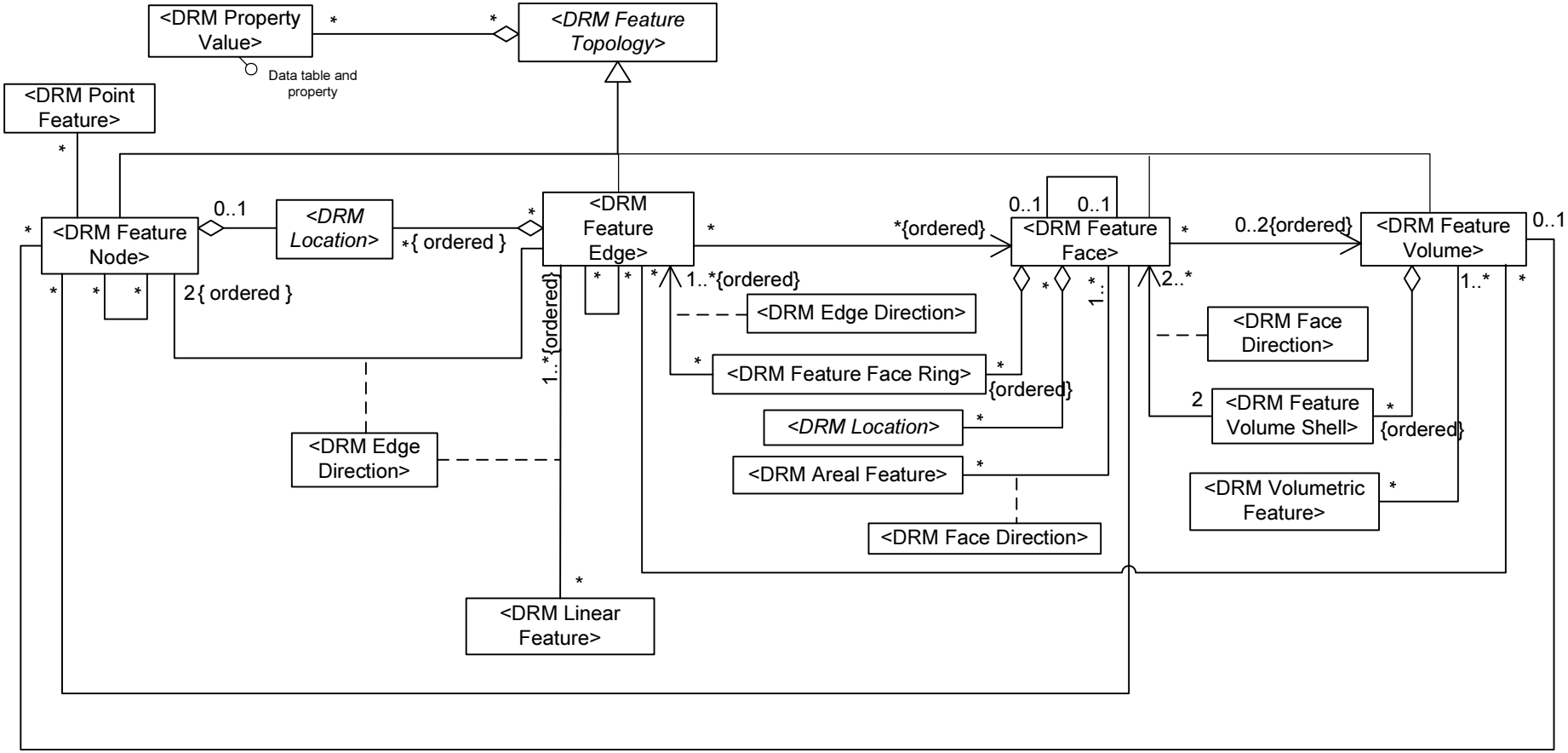

Sheet 12 — Feature topology
(Version 4.1)